Canning Fruits

A PACIFIC NORTHWEST EXTENSION PUBLICATION • PNW199

Washington State University • Oregon State University • University of Idaho

CANNING FRUITS

Home canning can be a safe and economical way to preserve fruits at home, but it must be done with care. Even garden fresh and thoroughly washed foods harbor microorganisms, including bacteria, yeasts, and molds. Microorganisms decrease food quality and may form toxins, or poisons, under certain conditions.

To preserve food for long-term storage, conditions must be made unfavorable for the growth of microorganisms. When fruits are canned, some microorganisms are destroyed by heat; others survive but cannot grow in acid foods or in air-free jars. These conditions also retard other undesirable changes such as vitamin loss, darkened color, and off-flavors.

The directions in this publication have been carefully researched for safe home canning. Following the directions exactly is vital to ensure a product that is top quality and safe to eat.

Selecting Equipment

You should base your choice of whether to use a boiling water canner or pressure canner on the level of acidity in the food you will be canning. When canning fruits, you can safely use a boiling water canner. Molds, yeasts, and bacteria which can grow in these high-acid foods are destroyed at boiling water-bath temperatures. Some fruits, such as Asian pears and figs, require the addition of acid (i.e., lemon juice) to be safely processed in a boiling water canner.

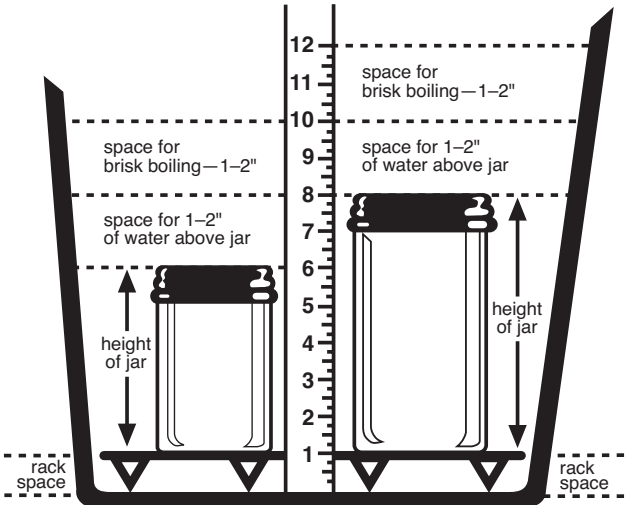

The canner must have room for 1 to 2 inches of briskly boiling water over the tops of the jars during processing; measure with a ruler when you buy. It is also important for the canner to have a lid and a rack.

Standard Mason jars are the best choice for canning. Other jars may not be heat tempered and could break during the canning process, or may not seal properly because their sealing surfaces do not exactly fit canning lids. Inspect jars for cracks and chips, and discard damaged ones. Inspect rings for dents and rust, and discard if either is found. To ensure proper sealing, do not use lids that are old, dented, deformed, have gaps or other defects in the sealing gasket, or have been used before. Spoilage could result if jars don't seal, and food is wasted.

Preparing Equipment

Wash jars, metal screw bands, and lids in hot, soapy water. Rinse. Place jars upside down on a clean, dry cloth, or leave them in the dishwasher until needed. Jars should be hot when filled to prevent breakage. Keep hot in a dishwasher or preheat in a boiling water canner. Follow the manufacturer's directions for preparing lids before use.

Foods processed less than 10 minutes should be filled into sterilized jars. To sterilize empty jars, place them right side up in a boiling water canner. Fill with water to 1 inch above the jar tops. Boil 10 minutes at altitudes less than 1,000 feet. Add 1 minute for each additional 1,000 feet of elevation.

Selecting and Preparing Fruits

Select fresh, firm fruit. Gather or purchase only as much as you can practically handle before fruit becomes overripe. Work quickly throughout preparation and canning. If food is allowed to stand, quality is lowered, and food spoilage is more likely to occur.

Yield will depend upon quality, ripeness, size, and variety. The amount generally needed per quart is:

Fruit	Pounds Needed	Fruit	Pounds Needed
Apples	2 ½–3	Peaches	2–3
Apricots	2–2 ½	Pears	1 ½–3
Berries	1 ½–3	Plums	1 ½–2 ½
Cherries	2–2 ½		

Sort for size and ripeness. Wash in cool, running water, or lift in and out of several changes of water. Avoid soaking. Peel (if desired) and trim blemishes after washing the food. Do not can decayed or overripe fruit. Acidity decreases as fruit ripens.

Maintaining Color and Flavor

Follow these guidelines to ensure that fruit retains optimum color and flavor:

- Use only high-quality fruit that is mature and free of diseases and bruises.
- Don't unnecessarily expose prepared foods to air. Can them as soon as possible.
- Use the hot pack method for better long-term color retention than the raw pack method.
- Pre-treat fruits with light-colored flesh such as apples, apricots, nectarines, peaches, and pears to prevent darkening. Put prepared fruit into a solution of 3 grams (3000 milligrams) ascorbic acid to 1 gallon of cold water. This procedure is also useful for preventing stem-end discoloration in cherries and grapes. You can get ascorbic acid in several forms:
  - *Pure powder.* Seasonally available among canners' supplies in supermarkets and health food stores. One level teaspoon of pure ascorbic acid powder weighs about 3 grams. Use 1 teaspoon per gallon of water for pre-treatment.
  - *Vitamin C tablets*. Economical and available year-round in many stores. Buy 500-milligram tablets; crush and dissolve 6 tablets per gallon of water for pre-treatment.
  - *Commercially prepared mixes of ascorbic and citric acid*. Seasonally available among canners' supplies in supermarkets. Sometimes citric acid powder is also sold in supermarkets, but it is less effective in controlling discoloration. Follow the manufacturer's directions for amounts to use.

Sweetening Fruits

Adding a sugar syrup to canned fruits helps to retain the flavor, color, and texture. Other sweeteners may be used, too.

Preparing sugar syrup. Select the level of sweetness you desire based on the chart immediately below. Heat water and the listed amount of sugar together. Bring to a boil and pour over raw fruit in jars. For hot packs, bring water and sugar to a boil, add fruit, reheat to boil according to the processing chart, and fill into jars immediately.

	For 9-Pint Load		For 7-Quart Load	
Syrup Type	Water	Sugar	Water	Sugar
Very Light	6 ½ cups	¾ cup	10 ½ cups	1 ¼ cups
Light	5 ¾ cups	1 ½ cups	9 cups	2 ¼ cups
Medium	5 ¼ cups	2 ¼ cups	8 ¼ cups	3 ¾ cups
Heavy	5 cups	3 ¼ cups	7 ¾ cups	5 ¼ cups

Using other sweeteners. Light corn syrup or honey may be used in place of sugar. However, honey can overpower fruit flavor.

Canning Without Sugar

Adding sugar to canned fruits is not necessary to prevent spoilage and can be safely omitted. To can without sugar, replace sugar syrup with water or regular unsweetened fruit juice and follow the processing chart methods and times.

When canning fruits without sugar, select fully ripe, but firm fruits. Sucralose (commonly called Splenda) is the only sugar substitute in the marketplace that can be added to liquids before canning because it is heat stable. Other sugar substitutes are best added after the fruit is opened, just before eating.

Packing Jars

Follow the preparation directions for each fruit in the processing chart at the end of this publication. For the hot pack method, food is briefly boiled in water, syrup, or juice, and packed into hot jars. Then, the cooking liquid or boiling water is added. For the raw pack method, food is packed raw into hot jars and covered with boiling water, syrup, or juice.

The hot pack method has several advantages. Heated fruits are softer and easier to pack into jars. As a result, more fruit can be put in each jar so fewer jars are needed. There is also less floating fruit, the processing time is usually shorter, and the flesh color of light-colored fruits such as apples and peaches is often better protected. The main advantage of raw-packed fruit is a firmer texture.

Pack food and liquid in jars until there is ½ inch headspace unless directed otherwise in the processing chart. Headspace is the space between the food or liquid and the top of a jar. If a jar is too full, some of the contents could bubble out during heat processing and leave food on the sealing surfaces so that the jar does not seal. Too much headspace may prevent sealing if the processing time is too short to exhaust all air from the jar.

After filling jars, run a plastic utensil around the insides of the jars to remove air bubbles.

Closing Jars

Wipe jar rims and threads with a clean, damp paper towel to remove any bits of food that might prevent a seal. Follow the manufacturer's directions for preparing flat lids. Cover the rims with a new lid, putting the circle of sealing compound against the glass. Screw on the metal band following the manufacturer's directions for tightening bands. If rings are too loose, liquid can escape during processing and seals may fail. If rings are too tight, air cannot vent during processing, causing lids to buckle or jars to break.

Processing in a Boiling Water Canner

1. Use a rack to keep jars from touching the canner bottom and allow heat to reach all sides of the filled jars. Fill the canner half full of water.

2. Preheat water to 140°F for raw-packed fruit and to 180°F for hot-packed fruit. Place clean, empty jars into the canner to preheat to help prevent breakage. Jars can also be preheated in a dishwasher.
3. Load filled jars into the canner, keeping jars upright at all times.
4. Add more boiling water, if needed, to bring water 1 to 2 inches above jar tops. Avoid pouring water directly on the jars. Place the lid on the canner. (If a pressure canner is used, leave the cover unfastened and the petcock open to prevent buildup of pressure.)
5. Turn heat to the highest setting and heat until water boils vigorously. Once boiling, set a timer for the total minutes required for processing the fruit. Select the processing time for the style of pack (hot or raw), the jar size, and the altitude where you live.
6. Keep the canner covered and maintain a boil throughout the process schedule. The heat setting can be lowered to a gentle boil, as long as the boil is maintained for the entire process time. If the water stops boiling at any time during the process, bring back to a vigorous boil and begin the timing of the process over, from the beginning.
7. Add more boiling water during processing if necessary to keep the water level above the jars.
8. When processing time is complete, turn off the heat and remove the canner lid. Wait 5 minutes before removing jars.
9. Using a jar lifter, remove the jars, being careful not to tilt them, and place on a towel 1 inch apart. Spoilage could occur if jars are left in hot water.

Cooling Jars

Cool jars on a rack or cloth at room temperature, allowing air to circulate freely around them. Avoid cold drafts or fans blowing on the jars.

Do not retighten screw bands after processing. Retightening of hot lids may cut through the gasket and cause seal failure.

Testing for Seal

After cooling 12–24 hours, test each jar for a vacuum seal. Jars with flat, metal lids are sealed if:

1. The lid has popped down in the center.
2. The lid does not move when pressed down.
3. Tapping the center of the lid with a spoon gives a clear, ringing sound.

Reprocessing

If a jar does not seal, refrigerate the contents and use within a few days, or reprocess within 24 hours of the initial processing. Reprocess using a hot or raw pack as recommended for that product. Wipe jar rims clean. Use a new lid and process for the full time listed. Fruit which has been heat processed twice may not be as firm or as nutritious. Alternatively, you can freeze the jars instead of reprocessing. In this case, adjust the headspace to 1½ inches. *Foods that were under-processed or improperly processed and held over 24 hours should be destroyed.*

Storing

Remove the screw bands so the lids under them do not cause rusting. Wipe jars. Label with the date, contents of the jar, and processing information.

Store jars in a cool, dark, dry place. For best eating quality and nutritive value, use within one year. Exposure to heat, freezing temperatures, light, or dampness will decrease the quality and shelf life of canned food.

Before Using

As you select each jar for use, examine it for signs of spoilage. Check the lid for tightness and a vacuum seal. With the jar at eye level, look for streaks of dried food on the outside of the jar. Inside the jar, look for cloudy canning liquid, rising air bubbles, or any unnatural color. While opening the jar, watch for spurting liquid or cotton-like mold growth on food surfaces or under the lid. Smell for unnatural or off odors. Never taste food from a jar with an unsealed lid or food that shows signs of spoilage.

Disposal

If there is any sign of spoilage, destroy the food. You can either put spoiled high-acid food down the garbage disposal with lots of water or flush the liquid portion down the sink and wrap the solids in newspaper or plastic and discard in the garbage.

Fruit Canning Processing Chart

Canning method. Instructions for processing various fruits in a boiling water canner are provided in the following chart. Follow the preparation instructions carefully. Begin counting the processing time when the water comes back to a rolling boil.

Various altitudes. Adjust the processing time for elevations over 1,000 feet.

Headspace. Leave ½ inch headspace for both the fruit and liquid unless otherwise specified.

Process Time (Minutes) at Various Altitudes

Fruit	Preparation	Pack	Jar Size	0–1000 ft	1001–3000 ft	3001–6000 ft	Over 6000 ft
Apples	Wash, peel, core, and slice. To prevent darkening, put in ascorbic acid solution. Drain. Boil 5 minutes in light syrup, water, or juice. Pack into hot jars and cover with boiling cooking liquid.	Hot	Pints and Quarts	20	25	30	35
Applesauce	Wash apples. Cut large fruit into pieces. Simmer until soft. Add water, if needed, to prevent sticking. Put through food strainer or mill. Add sugar to taste. Reheat sauce to boil and pack into hot jars. ***Caution***: *Use a lid or wear protective clothing when heating to prevent burns from popping applesauce*.	Hot	Pints	15	20	20	25
			Quarts	20	25	30	35
Apricots, nectarines, peaches, pears	Wash. Peel if desired (to peel peaches, dip in boiling water 30–60 seconds, place in cold water, and slip skins). Halve fruit and remove pits or cores. Slice if desired. To prevent darkening, put in ascorbic acid solution. Drain.						
	CAUTION: Do not use this process to can white-flesh peaches. Some white-flesh peaches have a natural pH value which makes them unsafe for boiling water canning. Currently, there are no safe processing times for white-flesh peaches. Freezing is a safe alternative.						
	Hot pack. Heat apricots, nectarines, or peaches until syrup, water, or juice boils. Pack fruit into hot jars and cover with boiling liquid. For pears, boil in cooking liquid for 5 minutes before packing into jars.	Hot	Pints	20	25	30	35
			Quarts	25	30	35	40
	Raw pack. Pack fruit into hot jars and cover with boiling syrup, water, or juice.	Raw	Pints	25	30	35	40
			Quarts	30	35	40	45
Asian pears	Asian pears are lower in acid than Bartlett or other similar varieties of pears. In order to can safely, lemon juice is added to jars before processing.						
	Wash. Peel, halve, and remove cores. Slice if desired. To prevent darkening, put in ascorbic acid solution. Drain.						
	Hot pack. Heat fruit until syrup, water, or juice boils. Add 2 tablespoons bottled lemon juice per quart or 1 tablespoon per pint to the jars. Fill hot jars with hot Asian pears and cooking liquid.	Hot	Pints	20	25	30	35
			Quarts	25	30	35	40
	Raw pack. Pack fruit into jars. Add 2 tablespoons bottled lemon juice per quart or 1 tablespoon per pint to the jars. Cover with boiling syrup, water, or juice.	Raw	Pints	25	30	35	40
			Quarts	30	35	40	45
Berries ***Note:*** *The quality of canned strawberries is poor.*	Choose firm berries with no mold. Wash and drain. Prepare and boil syrup, if desired. Add ½ cup syrup, water, or juice to each jar before addition of berries.						
	Hot pack. Heat berries in boiling water 30 seconds. Drain. Pack into hot jars. Cover with boiling syrup, water, or juice.	Hot	Pints and Quarts	15	20	20	25
	Raw pack. Pack raw berries into hot jars. Shake gently to obtain full pack. Cover with boiling syrup, water, or juice.	Raw	Pints	15	20	20	25
			Quarts	20	25	30	35

Process Time (Minutes) at Various Altitudes

Fruit	Preparation	Pack	Jar Size	0–1000 ft	1001–3000 ft	3001–6000 ft	Over 6000 ft
Cherries (sweet or pie)	Wash. Remove pits, if desired.						
	Hot pack. Put cherries in large saucepot. Add ½ cup. syrup, water, or juice per quart. Bring to boil. Fill hot jars with cherries and cooking liquid.	Hot	Pints	15	20	20	25
			Quarts	20	25	30	35
	Raw pack. Add ½ cup boiling syrup, water, or juice to hot jars. Pack cherries, shaking to obtain full pack. Cover with cooking liquid.	Raw	Pints and Quarts	25	30	35	40
Figs	Select firm, ripe, uncracked figs. Do not can overripe fruit with very soft flesh. Wash. Drain. Do not peel or remove stems. Cover figs with water and boil 2 minutes. Drain. Gently boil figs in light syrup for 5 minutes. Add 2 tablespoons bottled lemon juice per quart or 1 tablespoon per pint to the jars. Fill jars with hot figs and cooking syrup.	Hot	Pints	45	50	55	60
			Quarts	50	55	60	65
Fruit Juice	Wash fruit. Remove pits or seeds, crush fruit. Heat to simmering, stirring to prevent sticking. Strain through cloth bag. Add 1 cup sugar to 1 gallon juice, if desired. Reheat to simmering (185–210°F). Pour hot juice into hot jars. If using a steam juicer to prepare juice, pour simmering juice directly into hot jars.	Hot	Pints and Quarts	5	10	10	15
			½ Gallon	10	15	15	20
Fruit Puree	Wash, peel, and remove seeds or pits. Add 1 cup hot water per quart of fruit. Cook slowly until soft. Put through sieve or food mill. Add sugar to taste. Reheat to boiling and pack into hot jars leaving ¼ inch headspace. ***Caution***: *Do not use figs, cantaloupe or other melons, papaya, ripe mango, or coconut to make fruit purees because they are not acidic enough to safely process in a boiling water canner.*	Hot	Pints and Quarts	15	20	20	25
Plums	Wash and remove stems. To can whole, prick skins on two sides of plums with fork to prevent splitting. Freestone varieties may be halved and pitted.						
	Hot pack. Add plums to hot syrup and boil 2 minutes. Cover saucepan and let stand 20–30 minutes. Fill hot jars with hot plums and cover with cooking liquid.	Hot and Raw	Pints	20	25	30	35
			Quarts	25	30	35	40
	Raw pack. Fill hot jars with raw plums, packing firmly. Cover with hot syrup, water, or juice.						
Rhubarb	Wash stalks and cut into ½–1-inch pieces. Add ½ cup sugar per quart of fruit. Let stand until juice appears. Bring to a boil and fill hot jars.	Hot	Pints and Quarts	15	20	20	25

By **Lizann Powers-Hammond**, Regional Food Specialist, Washington State University; and **Val Hillers**, Extension Food Specialist, Washington State University, retired. The information in this bulletin is based on U.S. Department of Agriculture recommendations. The material was reviewed by Extension specialists in food and nutrition at Oregon State University and the University of Idaho.

Pacific Northwest Extension publications are produced cooperatively by the three Pacific Northwest land-grant universities: Washington State University, Oregon State University, and the University of Idaho. Similar crops, climate, and topography create a natural geographic unit that crosses state lines. Since 1949, the PNW program has published more than 600 titles, preventing duplication of effort, broadening the availability of faculty specialists, and substantially reducing costs for the participating states.

Pacific Northwest Extension publications contain material written and produced for public distribution. You may reprint written material, provided you do not use it to endorse a commercial product. Please reference by title and credit Pacific Northwest Extension publications.

Copyright 2012 Washington State University.

Order information:

Washington State University Extension
http://pubs.wsu.edu
Fax: 509-335-3006
Toll-free phone: 800-723-1763
ext.pubs@wsu.edu

Oregon State University Extension Service
http://extension.oregonstate.edu/catalog
Fax: 541-737-0817
Toll-free phone: 800-561-6719
puborders@oregonstate.edu

University of Idaho Extension
http://www.cals.uidaho.edu/edComm/catalog.asp
Fax: 208-885-4648
Phone: 208-885-7982
calspubs@uidaho.edu

Published and distributed in furtherance of the Acts of Congress of May 8 and June 30, 1914, by Washington State University Extension, Oregon State University Extension Service, University of Idaho Cooperative Extension System, and the U.S. Department of Agriculture cooperating. WSU Extension programs, activities, materials, and policies comply with federal and state laws and regulations on nondiscrimination regarding race, sex, religion, age, color, creed, and national or ethnic origin; physical, mental, or sensory disability; marital status or sexual orientation; and status as a Vietnam-era or disabled veteran. Washington State University Extension, The Oregon State University Extension Service, and University of Idaho Extension are Equal Opportunity Employers. Evidence of noncompliance may be reported through your local Extension office. Trade names have been used to simplify information; no endorsement is intended.

Originally published June 1980. Revised September 2012. Reviewed April 2018. **PNW199**